

WAREWASHING

EDITION 22-23

01279 876 500 www Mach.uk.com

ABOUT MACH



Mach are one of Europe's leading commercial warewasher manufacturers. Founded in Italy in 1988, they have been supplying the UK market with quality glasswashing and dishwashing equipment for over 20 years. During this time, they have built a long-standing reputation for high build quality, ultimate durability and excellent wash results.

Mach have invested heavily in research, manufacturing and testing facilities and their state-of-the-art plant in Italy utilises the latest robotic equipment and autonomous principles to ensure each machine is built to the highest of quality standards. The facility is fully compliant with the internationally recognised ISO 9001 quality management standard and all machines are fully tested and inspected before shipping.

Mach UK offers premium service and distribution of all Mach warewashers to the UK market. All products are specifically designed for the local requirements, including certification with UK Waterboard & Regulatory Advisory Service (WRAS).

As standard, machines are backed by an extensive 1-year commercial warranty, an optional labour warranty is also available. They can be purchased as stand-alone products, or as part of our extensive washroom design & installation service.

Contents

Undercounters

Page 4

Passthroughs

Page 10

Utensil Washers

Page 16

Rack Conveyors

Page 22

Technical Specifications

Page 24

Accessories

Page 30

Warranty & Service

Page 31

Washroom Design

Page 31

Mach UK
Unit F, Woodside Industrial Estate
Dunmow Road
Bishop's Stortford
Hertfordshire
CM23 5RG

01279 876 500
sales@mach.uk.com
www.mach.uk.com



Mach is committed to quality and high performance with all its warewashers. The principles of excellent build quality, ultimate reliability, simplicity and ease of use are present in all Mach products, from small undercounter glasswashers and commercial dishwashers, through to large pass-throughs, utensil washers and rack conveyor systems.

Mach machines are designed to be simple to operate and easy to maintain. All wash tanks and machine bodies are finished in the highest quality AISI 304 stainless steel with an attractive scotch-brite finish. The best quality components also ensure Mach delivers on its reputation for reliability and that is why Mach choose to only use stainless-steel components in their machines.

Across all models, moving components and wash tank accessories are manufactured in stainless steel, including wash arms, rinse arms, plugs, jets and filters. Mach also manufacture all internal boilers in stainless steel and use armoured heating elements to guarantee longevity.

All products are manufactured in full compliance with WRAS and CE regulations, ISO standards and our highest customer expectations in mind. A promise of quality that is backed by a 1-year commercial warranty as standard. For further details see page 29.

Made in Italy

1 YEAR COMMERCIAL WARRANTY AS STANDARD

www.mach.uk.com

Glasswashers



Model	Description	Dimensions	Entry	Power	Waste	Price
MB9235	350 x 350mm	410 x 495 x 650mm	250mm	13 Amp	Gravity	£1,189.50
					Pumped	£1,319.50
MB9240	400 x 400mm	460 x 540 x 690mm	295mm	13 Amp	Gravity	£1,300
					Pumped	£1,449.50
MB9451	500 x 500mm	595 x 620 x 810mm	315mm	13 Amp	Gravity	£2,145
					Pumped	£2,275
MB9453	500 x 500mm High Power	595 x 620 x 810mm	315mm	30 Amp	Gravity	£2,145
					Pumped	£2,275





KEY FEATURES

All Stainless Steel Components

AISI304 stainless-steel components including armoured stainless steel elements, stainless steel boiler, filters, hinges, wash arms, rinse arms, plugs and jets.

Outstanding Wash Results

High power wash pump with upper and lower wash and rinse arms (400 and 500 models). Guaranteed wash at 60°c with hygienic rinse at 85°c.

Fast Heat Up & Recovery

Independent boiler and tank heating with armoured stainless steel elements and temperature indicator lights.

1 Year Commercial Warranty

Option to add labour warranty with extensive UK service network, quick callout times and spare parts held in stock.

Fully Automatic

Electronic detergent and rinse aid dispensers as standard. Fixed 150 second wash cycle on 350/400 models. Selectable 120 or 180 seconds on 500 models.

13 Amp or 30 Amp

All models available with 13A UK Plug. 500mm model also available in high power model with 30A 1 Phase (hard wired) power supply.

Energy Efficient

Insulated stainless steel boiler and double-skinned stainless steel door to reduce energy consumption, noise and prevent heat loss to environment.

Optional Drain Pump

Optional drain pumps available on all models , ideal for installations where drainaige is above ground height.

Max Entry

MB9235	250mm
MB9240	295mm
MB9451	315mm

For Full Specifications
See Page 24

For Warranty & Aftersales:
See Page 31

Product Dimensions

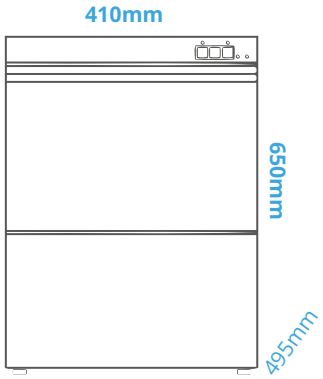

MB9235

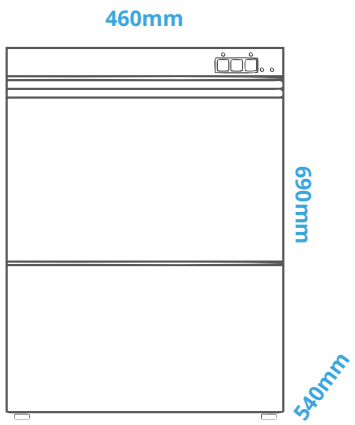

MB9240

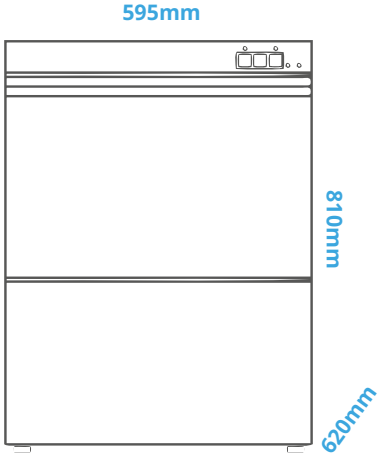

MB9451/3

Note: All Mach Glasswashers should be used in conjunction with a water softener, especially in hard water areas.

Dishwashers



Model	Description	Dimensions	Entry	Power	Waste	Price
MS9240	400 x 400mm Dishwasher	460 x 545 x 690mm	295mm	13 Amp	Gravity	£1,260
					Pumped	£1,375
MS9451	500 x 500mm Dishwasher Standard	595 x 620 x 810mm	350mm	13 Amp	Gravity	£2,405
					Pumped	£2,535
MS9453	500 x 500mm Dishwasher High Power	595 x 620 x 810mm	350mm	30 Amp	Gravity	£2,145
					Pumped	£2,275
MS9451BT	500 x 500mm Dishwasher Standard + Type A Air Gap	595 x 620 x 810mm	350mm	13 Amp	Gravity	£2,405
					Pumped	£2,535
MS9453BT	500 x 500mm Dishwasher High Power + Type A Air Gap	595 x 620 x 810mm	350mm	30 Amp	Gravity	£2,405
					Pumped	£2,535





KEY FEATURES

All Stainless Steel Components

AISI304 stainless-steel components including armoured stainless steel elements, stainless steel boiler, filters, hinges, wash arms, rinse arms, plugs and jets.

Outstanding Wash Results

High power wash pump with upper and lower wash and rinse arms. Guaranteed wash at 60°c with hygienic rinse at 85°c.

Fast Heat Up & Recovery

Independent boiler and tank heating with armoured stainless steel elements and temperature indicator lights.

1 Year Commercial Warranty

Option to add labour warranty with extensive UK service network, quick callout times and spare parts held in stock.

Fully Automatic

Electronic detergent and rinse aid dispensers as standard. Selectable 120 or 180 seconds wash cycle. (Fixed 150 seconds on compact model).

13 Amp or 30 Amp

All models available with 13A UK Plug. 500mm model also available in high power model with 30A 1 Phase (hard wired) power supply.

Energy Efficient

Insulated stainless steel boiler & double-skinned stainless steel door to reduce energy consumption, noise and prevent heat loss to environment.

Optional Drain Pump

Optional drain pumps available on all models , ideal for installations where drainaige is above ground height.

Max Entry

MS9240	295mm
MS9451	350mm
MB9453	350mm

For Full Specifications
See Page 24

For Warranty & Aftersales:
See Page 31

Optional Break Tank

All our dishwashers are supplied with a WRAS Type B Air Gap as standard for compliance in catering & hospitality.

An optional stainless steel internal WRAS Type A Air Gap is available on 500mm models to ensure compliance in high risk areas such as schools, hospitals, nurseries and care homes.

A break tank ensures that in the event of a fault, dirty water cannot backfill into the mains supply and cause a hazzard.

Product Dimensions

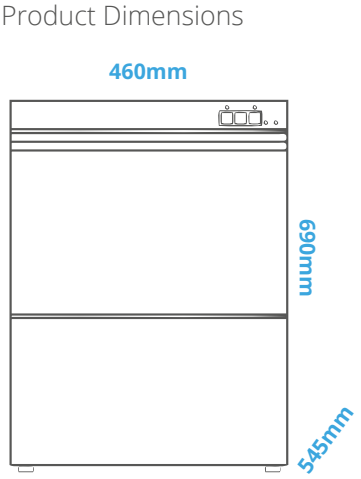

MS9240

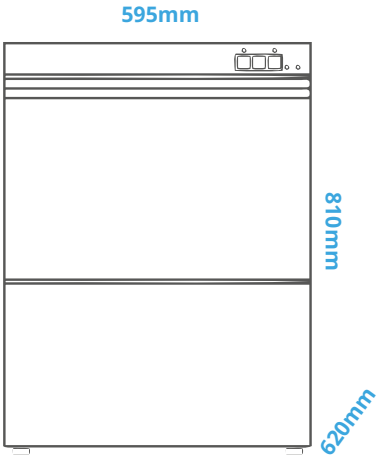

MS9451/3

Deluxe Range



Model	Description	Dimensions	Entry	Power	Waste	Price
MS9553PS-GW	500mm Deluxe Glasswasher	600 x 620 x 820mm	325mm	30 Amp	Pumped	£2,795
MS9553PS-DW	500mm Deluxe Dishwasher	600 x 620 x 820mm	380mm	30 Amp	Pumped	£2,795





Deluxe Models

Premium dishwashers & glasswashers with fully insulated double wall construction and increased boiler power for higher thermal performance.

In addition, Mach deluxe machines feature full width stainless steel wash tank filters and front-access to the drain pump mechanism for easy maintenance and cleaning.

Water levels are also designed to sit below the tank filter line for improved health and safety. This makes them the ideal model for large restaurant chains and contract customers.

KEY FEATURES

All Stainless Steel Components
Pressed stainless steel tank with rounded corners and all components in AISI 304 stainless steel including elements, boiler, filters, hinges, wash arms, rinse arms, plugs and jets.

Outstanding Wash Results
High power wash pump with upper and lower wash and rinse arms. Guaranteed wash at 60°c with hygienic rinse at 85°c.

Improved Heat Up & Recovery
High power 4.5kW boiler with 2.5kW independent wash tank heating for industry leading heat up and recovery times.

1Year Commercial Warranty
Option to add labour warranty with extensive UK service network, quick callout times and spare parts held in stock.

Fully Automatic
Selectable 120 or 180 seconds wash cycle with integrated electronic detergent and rinse aid dispensers. Drain pump as standard.

Full Width Tank Filters
Full width tank filter finished in stainless steel with rounded corners and situated above the water line for easier cleaning and maintenance.

Double Wall Construction
Full double wall stainless steel construction for improved sound insulation, better thermal performance and less energy consumption.

Front Access To Drain Pump
Drain pump filter access from front panel to prevent nuisance warranty callouts and prevent unecessary breakdowns.

Max Entry Plates
MB9235PS
380mm

Max Entry Glasses
MB9235PS
325mm

For Full Specifications
See Page 24

For Warranty & Aftersales:
See Page 31

Product Dimensions

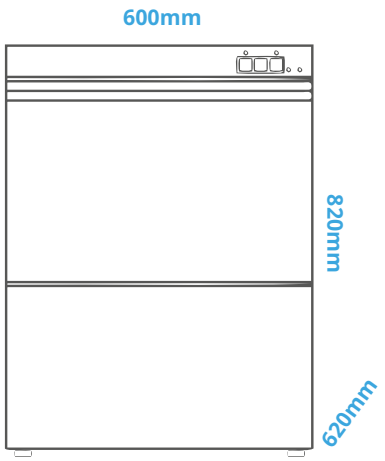

MS9553PS



Passthrough Dishwashers







Tabling Options

Suitable for straight through or corner sited installations. Wide range of tabling options including entry and exit sinks available on request.

WRAS APPROVED PRODUCT

Model	Description	Dimensions	Entry	Power	Waste	Price
MS/9103	Passthrough Dishwasher 500mm	635 x 735 x 1460mm	440mm	3 Phase	Gravity	£3,445
					Pumped	£3,575
MS/9103BT	Passthrough Dishwasher 500mm + Type A Air Gap	635 x 735 x 1460mm	440mm	3 Phase	Gravity	£3,672.50
					Pumped	£3,802.50

KEY FEATURES

All Stainless Steel Components

AISI304 stainless-steel components including armoured stainless steel elements, stainless steel boiler, filters, hinges, wash arms, rinse arms, plugs and jets.

Full Width Wash Tank Filter

Full stainless steel wash tank filter protects pumps and components from blockages caused by food debris, straws and broken glass.

Optional Break Tank

Optional stainless steel internal Type A air gap for compliance in high risk areas such as care homes, schools and nurseries.

1 Year Commercial Warranty

Option to add labour with extensive UK service network, quick callout times and spare parts held in stock.

Selectable Wash Cycles

Selectable 75 or 180 second wash cycles with completely automatic operation. Integrated electronic detergent and rinse aid dispensers.

3 Phase Power

High power 11.5kW boiler for rapid heat up and recovery. Optional 1 phase downgrade to 6kW boiler is available for sites without 3 phase.

Energy Efficient

Insulated stainless steel boiler with double-skinned stainless steel hood to reduce energy consumption, noise and prevent heat loss to environment.

Optional Drain Pump

Optional drain pumps available on all models , ideal for installations where drainaige is above ground height.

Max Entry

MS/9103
440mm



For Full Specifications
See Page 26

For Warranty & Aftersales:
See Page 31

Product Dimensions

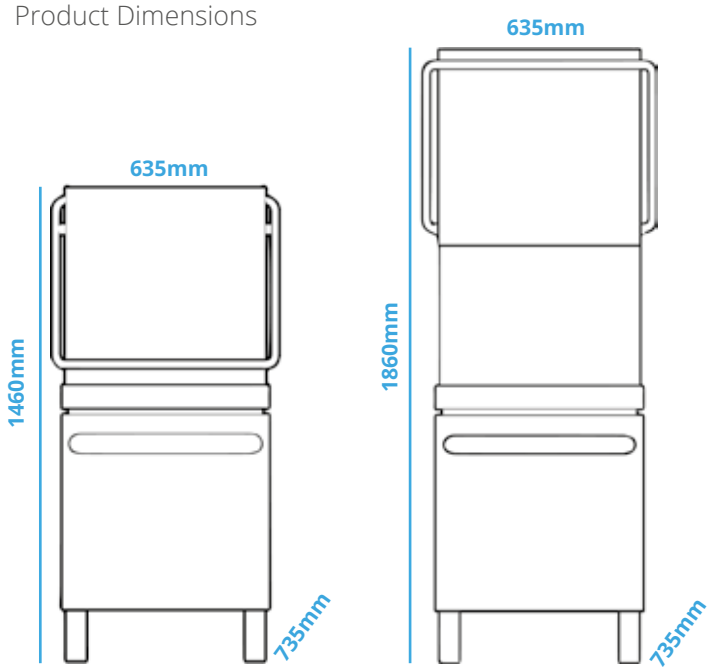



Note: All Mach Dishwashers should be used in conjunction with a water softener, especially in hard water areas.

Deluxe Passthrough

34%
ENERGY SAVING
ON RC MODELS



Model	Description	Dimensions	Entry	Power	Waste	Price
MS/9120AT	Deluxe Passthrough	635 x 735 x 1460mm	440mm	3 Phase	Pumped	**£4,322.50**

Up To 34% Energy Saving

RC models feature an innovative new internal radiator system and an atmospheric boiler. This system utilises waste heat from the wash tank to pre-heat cold inlet water, improving recovery times, reducing energy consumption by up to 34% and making for a more pleasant working environment by preventing steam ingress to the surrounding environment.





KEY FEATURES

All Stainless Steel Components

AISI304 stainless-steel components including armoured stainless steel elements, stainless steel boiler, filters, hinges, wash arms, rinse arms, plugs and jets.

Rinse Booster Pump

High power secondary pump with soft washing start protects fragile items and improves wash results.

Double Wall Stainless Steel

Full double wall stainless steel construction for improved sound insulation, better thermal performance and less energy consumption.

Temperature Display

Digital display of both wash and rinse temperatures for the highest levels of health & safety.

5 Selectable Wash Cycles

Completely automatic operation with 5 cycles between 90 and 270 seconds. Integrated electronic detergent and rinse aid dispensers.

1 Year Commercial Warranty

Option to add labour warranty with extensive UK service network, quick callout times and all spare parts held in stock.

Partial Water Change

Atmospheric boiler with partial water change on each cycle. Complete water change every 7 cycles. Maintains highest levels of hygiene.

Front Access To Drain Pump

Drain pump as standard with filter access from front panel to prevent nuisance warranty callouts and prevent unecessary breakdowns.

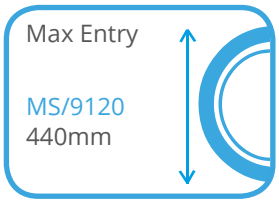

For Full Specifications
See Page 26

For Warranty & Aftersales:
See Page 31

Product Dimensions

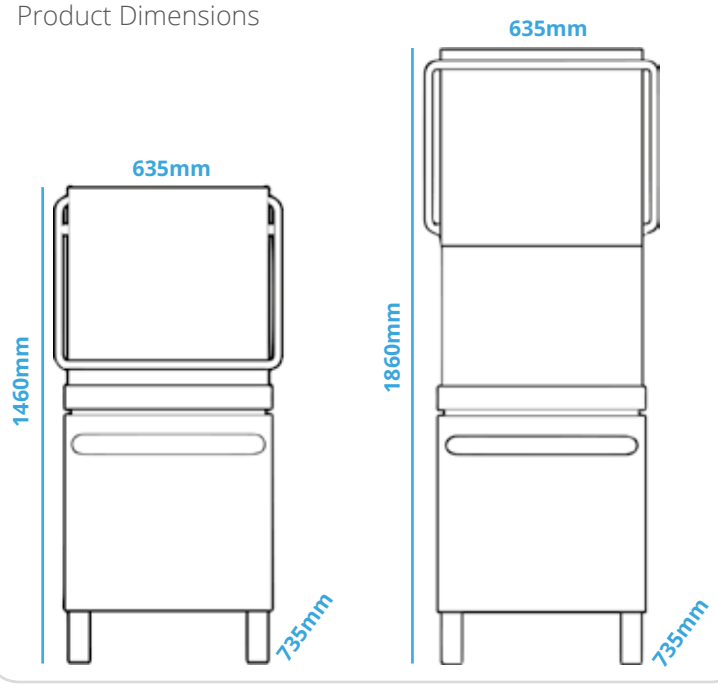





Note: All Mach Dishwashers should be used in conjunction with a water softener, especially in hard water areas.

XL Passthrough

FITS GASTRONORM CONTAINERS!



XL SIZE

63cm Basket & 50cm Clearance

Ideal For Gastronorm Containers

The brand new extra large Passthrough Dishwasher is Mach's latest commitment to creating diverse products & premium cleaning solutions.

With a massive 500mm height clearance, the increased hood allows you to wash more items at once. Also featuring a larger capacity **630 x 630mm** basket, the XL is capable of washing the largest of catering utensils including pots, pans and gastronorm baking trays.

Model	Description	Dimensions	Entry	Power	Waste	Price
HT635.23AT	XL Passthrough 630mm	725 x 815 x 1550mm	500mm	3 Phase	Pumped	**£5,200**





For Warranty & Aftersales:
See Page 31

For Full Specifications
See Page 26

KEY FEATURES

50cm Clear Entry Height

Increased hood clearance allows for washing of items up to 50cm tall, making it perfect for large kitchen utensils, pots and pans.

Rinse Booster Pump

High power secondary pump with soft washing start protects fragile items and improves wash results.

Fits Gastronorm Trays

Full 630 x 630mm basket designed for washing the largest of utensils, up to a standard gastronorm tray or bakery tray.

Temperature Display

Digital display of both wash and rinse temperatures for the highest levels of health & safety.

Fully Programmable

Fully programable digital interface with adjustable wash and rinse timings. Onboard diagnostics and error reporting for ease of maintenence.

1 Year Commercial Warranty

Option to add labour with extensive UK service network, quick callout times and all spare parts held in stock.

Partial Water Change

Atmospheric boiler with partial water change on each cycle. Complete water change every 7 cycles. Maintains highest levels of hygiene.

Double Wall Stainless Steel

Full double wall stainless steel construction with all stainless steel components including elements, boiler, filters, hinges, wash arms, rinse arms, plugs and jets.

630 x 630mm Basket

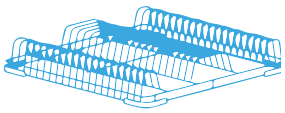

Max Entry Plates

500mm



Product Dimensions

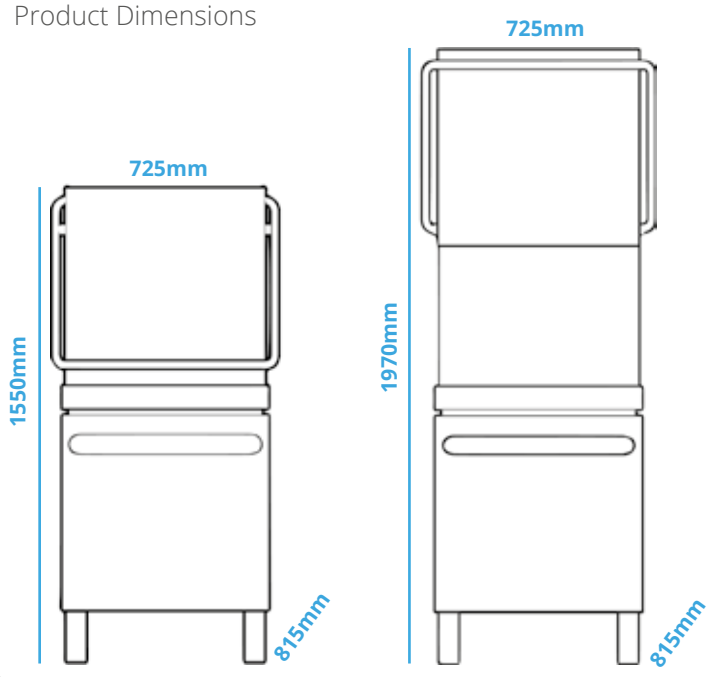



Note: All Mach Dishwashers should be used in conjunction with a water softener, especially in hard water areas.

Utensil Washers





FITS GASTRONORM CONTAINERS!

Designed as a universal machine to meet all the dishwashing and utensil washing requirements of a commercial kitchen, the UT850.23AP will fit anywhere a normal undercounter dishwasher would.

Featuring a remarkable load capacity, it is capable of washing standard 60x40cm baking trays and gastronorm containers. It is also ideally suited for easy installation into existing washrooms, sitting comfortably underneath standard single or double bowl sink tabling.

As standard the UT850.23AP includes a 500 x 500mm basket with a special insert for trays, a standard 500mm dishwasher basket for miscellaneous items and two cutlery inserts.

WRAS APPROVED PRODUCT

Model	Description	Dimensions	Max Entry	Power	Waste	Price
UT850.23AP	Undercounter Utensil Washer 500mm Basket	600 x 690 x 860mm	600 x 400mm	3 Phase	Pumped	£4,169.75
				1 Phase	Pumped	£4,169.75

KEY FEATURES

Universal 500mm Basket

Accepts a standard 50cm dishwasher basket for universal integration with existing systems.

High Power Pumps

High power 0.75kw wash pump with additional 0.3kW rinse booster pump to meet the most intensive washing requirements.

Fits Gastronorm Trays

Utilising specialist tray basket and deeper cabinet opening, unit can wash up to 600 x 400mm bakery trays or gastronorm pans.

All Stainless Steel Components

AISI304 stainless-steel components including armoured stainless steel elements, stainless steel boiler, filters, hinges, wash arms, rinse arms, plugs and jets.

Fully Automatic Operation

Selectable 60, 90, 120, 180 or 360 seconds wash cycle with integrated electronic detergent & rinse aid dispensers as standard.

1 Year Commercial Warranty

Option to add labour with extensive UK service network, quick callout times and all spare parts held in stock.

Front Access To Drain Pump

Drain pump as standard with filter access from front panel to prevent nuisance warranty callouts and prevent unecessary breakdowns.

Compact Dimensions

With compact overall dimensions the UT850.23AP is designed to fit well under standard commercial sinks and existing washroom tabling.

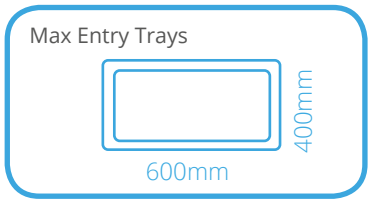

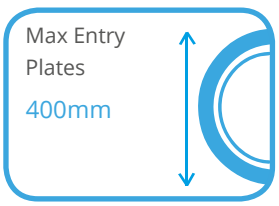

For Warranty & Aftersales:
See Page 31

For Full Specifications
See Page 26

Product Dimensions

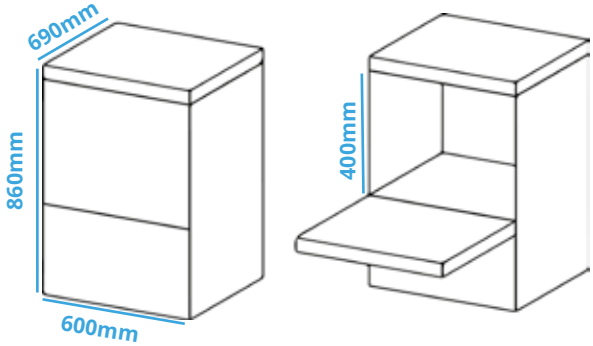



Note: All Mach utensil washers should be used in conjunction with a water softener, especially in hard water areas.

Utensil Washers







Model	Description	Dimensions	Entry	Power	Waste	Price
UT850.23AP	Utensil Washer 500 x 500mm Basket	600 x 695 x 1430mm	600 x 600mm	3 Phase	Gravity	**£4,870**

Designed as a universal but compact utensil washer for a range of applications including laboratories, bakeries, manufacturing, commercial kitchens and food production. Versatile with large clear entry height for pots, baking pans, utensils and gastronorm containers. Featuring a standard 50 x 50mm basket it can easily wash 60 x 40 standard baking trays and any objects up to 60cm height.

With all the standard features of the Mach Deluxe range of dishwashers, the UT850.23AP includes full stainless steel construction, stainless steel components and guaranteed reliability with a 1 year commercial warranty.

Supplied with one 50x050 insert for trays, 50 x 50 basket for miscellaneous items and two cutlery holders.

KEY FEATURES

Universal 500mm Basket

Accepts a standard 50cm dishwasher basket for universal integration with existing systems.

High Power Pumps

High power 0.75kw wash pump with additional 0.3kW rinse booster pump to meet the most intensive washing requirements.

60cm Clear Entry Height

Increased door height makes the machine highly versatile for a range of applications across commercial kitchens and laboratories.

All Stainless Steel Components

AISI304 stainless steel components including armoured stainless steel elements, stainless steel boiler, filters, hinges, wash arms, rinse arms, plugs and jets.

Fits Gastronorm Trays

Utilising specialist tray basket and deeper cabinet opening, unit can wash up to 600 x 400mm bakery trays or gastronorm pans.

1 Year Commercial Warranty

Option to add labour with extensive UK service network, quick callout times and all spare parts held in stock.

Fully Automatic Operation

Selectable 60, 90, 120, 180 or 360 seconds wash cycle with integrated electronic detergent & rinse aid dispensers as standard.

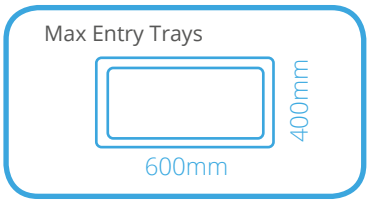

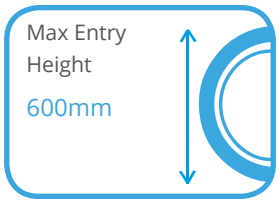

For Warranty & Aftersales:
See Page 31

For Full Specifications
See Page 26

Product Dimensions

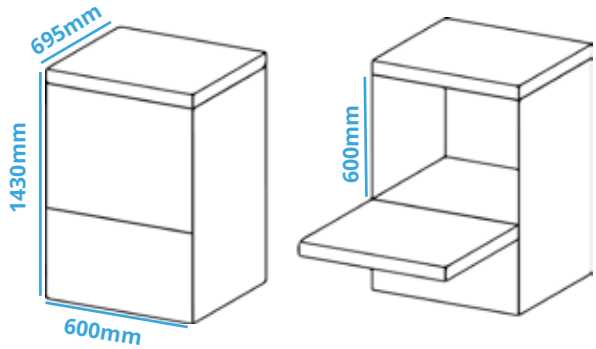



Note: All Mach utensil washers should be used in conjunction with a water softener, especially in hard water areas.

Utensil Washers

UT SERIES

1 YEAR
COMMERCIAL WARRANTY







Entry Height Up To 80cm

Tall door ideal for washing items up to 80cm in height. Perfect for baskets, cages, utensils and gastronorm trays.

Entry Width Up To 130cm

Entry widths from 55cm (UT855.13A) to large double wash arm systems with 130cm baskets (UT9130.13A).

5 Automatic Wash Cycles

5 Selectable wash cycles from 180 to 660 seconds. Highly configurable to suit your needs with adjustable temperatures and chemical dosing.

All Stainless Steel Components

Full AISI304 stainless steel construction including all moving components such as wash arms, boilers, jets, plugs and filters.

Gravity Waste

High capacity 43cm diameter gravity waste outlet with front accessible lever control release in stainless steel.

MLP60E Basic Controls Model

Dimensions	600 x 810 x 1900mm
Basket Size	550 x 690mm
Max Entry Height	800mm
Wash Cycles	180 or 360 seconds
Tank Capacity	42 Litre (6kW Heating)
Boiler Capacity	20 Litre (6kW Heating)
Pump Capacity	2kW Wash + 0.3 Rinse
Total Power	8kW (400V 3 Phase)
Waste Type	Gravity
Price	**£6,272.50**

The Mach ML range offers highly versatile and high performance utensil washing equipment that is suitable from a range of industry applications including catering, hospitality, food production, manufacturing, laboratory and medical.

Extremely reliable and robust, each appliance is manufactured entirely from AISI304 stainless steel. This includes a completely stainless-steel interior such as washing and rinse arms, filters, jets, boilers and elements. This gives Mach utensil washers a superior wash quality and long machine life.

All machines are available with a wide range of accessories and options to suit different industry applications and installation requirements. As part of our full design, quotation, installation and servicing package, our specialist consultants will help specify the correct machine for your industry requirements.

UT855.13A

Dimensions	600 x 810 x 1900mm
Basket Size	550 x 690mm
Max Entry Height	800mm
Wash Cycles	180, 300, 420, 540 or 660 seconds
Tank Capacity	42 Litre (6kW Heating)
Boiler Capacity	28 Litre (6kW Heating)
Pump Capacity	2kW Wash + 0.3kW Rinse
Total Power	8kW (400V 3 Phase)
Waste Type	Gravity
Price	**£7,094.75**

UT869.13A

Dimensions	820 x 810 x 1900mm
Basket Size	690 x 690mm
Max Entry Height	800mm
Wash Cycles	180, 300, 420, 540 or 660 seconds
Tank Capacity	42 Litre (9kW Heating)
Boiler Capacity	28 Litre (9kW Heating)
Pump Capacity	2.4kW Wash + 0.37kW Rinse
Total Power	11.4kW (400V 3 Phase)
Waste Type	Gravity
Price	**£9,473.75**

UT882.13A

Dimensions	950 x 810 x 1900mm
Basket Size	820 x 690mm
Max Entry Height	800mm
Wash Cycles	180, 300, 420, 540 or 660 seconds
Tank Capacity	42 Litre (9kW Heating)
Boiler Capacity	28 Litre (9kW Heating)
Pump Capacity	2.4kW Wash + 0.37kW Rinse
Total Power	11.4kW (400V 3 Phase)
Waste Type	Gravity
Price	**£11,482.25**

UT9130.13A

Dimensions	600 x 810 x 1900mm
Basket Size	1300 x 690mm
Max Entry Height	800mm
Wash Cycles	180, 300, 420, 540 or 660 seconds
Tank Capacity	88 Litre (9kW Heating)
Boiler Capacity	28 Litre (6kW Heating x2)
Pump Capacity	2.4kW Wash x2 + 0.37kW Rinse
Total Power	16.8kW (400V 3 Phase)
Waste Type	Gravity
Price	**£16,136.25**

Note: All Mach utensil washers should be used in conjunction with a water softener, especially in hard water areas.

Rack Conveyors

DESIGN & INSTALL
SITE SURVEYS AVAILABLE

All rollers & tabling pricing available on request. See page 29 for more details.



Model	Pre Wash	Wash	Rinse	2nd Rinse	Capacity	Dimensions	Power	Price
MST110	NO	YES	YES	NO	55 - 80	1100 x 765 x 1470mm	3 Phase 19.1 Kw	£10,185.50
MST140	NO	YES	YES	NO	64 - 98	1400 x 765 x 1470mm	3 Phase 19.1 Kw	£15,152.80
MST180	YES	YES	YES	NO	90 - 130	1800 x 765 x 1470mm	3 Phase 20.5 Kw	£16,536
MST210	YES	YES	YES	NO	110 - 170	2100 x 765 x 1470mm	3 Phase 20.5 Kw	£21,320
MST250	YES	YES	YES	YES	90 - 130	2500 x 765 x 1470mm	3 Phase 21 Kw	£22,464
MST280	YES	YES	YES	YES	110 - 170	2800 x 765 x 1470mm	3 Phase 21Kw	£27,352

Configure To Suit Your Needs

Highly configurable solution that meets the requirements of many industries, from large restaurant and banqueting halls, through to food production & manufacturing. The MST range is based around two standard units, each configurable to include a wide range of bespoke inlet and outlet tabling solutions, through to advanced additional features including automatic pre-rinse and drying sections.

All conveyors are tailored to meet your specification and built to order. Our specialist team will consult with your business to form a bespoke recommendation to suit your requirements.

Code	Accessory	Price
KIT/CDBD	Detergent + Rinse Dispensers	£845
MZA/908	Air Drying Unit	£5,525
MAFPC	Steam Extraction Heat Pump	£8,060
MCACV	Steam Extraction Hood	£1,835

KEY FEATURES

All Stainless Steel Components

Double skinned supporting frame in AISI304 stainless steel. Rounded stainless-steel tank with full width counterbalanced stainless steel door. All moving components in stainless steel.

Wide Range Of Tabling & Rollers

Complete bespoke package with wide range of entry and exit sinks, tabling and rollers to suit your installation requirements.

2 Working Speeds

Works to your rhythm with two changeable working speeds depending on load requirements.

Reversable Motion

Easily reversible forward and backward motion of baskets with rapid intervention.

Temperature Display

Digital display of wash tank and rinsing tempera-tures for improved health & safety.

Intelligent Energy Saving

Automatically detects the presence of baskets and adjusts washing, rinsing & drying accordingly.

Front Placed Lever Drain

Easy draining and clean-down with front-facing stainless-steel gravity waste release lever.

1 Year Commercial Warranty

Extensive UK service network with quick callout times and all spare parts held in stock.

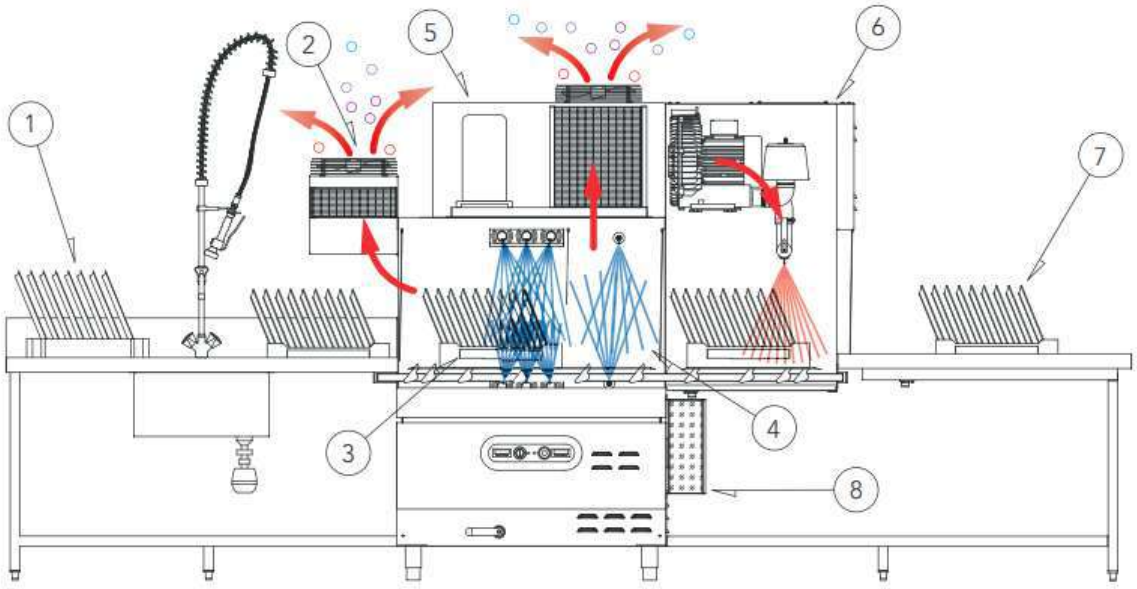

Stage	Description
1	Bespoke single bowl pre-wash sinks with monobloc spray arm. Fabrication in AISI 304 stainless steel.
2	Steam extraction hood to ensure pleasant environment and capture lost heat for energy recovery.
3 + 4	Utensil washing machine with wash and rinse system.
5	Steam Extraction with heating pump for further energy recovery.
6	Air drying unit ensures all wares leaving the unit are ready for use.
7	Bespoke exit table on runners for storage of items ready to return to service.
8	Rinse aid and detergent pumps container kit.

Note: All conveyor dishwashers should be used in conjunction with a water softener, especially in hard water areas.

Specifications

1 YEAR
COMMERCIAL WARRANTY
Optional labour warranties available. See page 29.





		MB9235	MB9240
External Dimensions	cm	41 x 49.5 x 65	46 x 54.5 x 69
Basket Dimensions	cm	35 x 35	50 x 50
Clear Entry Height	cm	23.5	28
Washing Cycle Time	sec.	150	150
Tank Capacity	Ltr	9.5	12.5
Boiler Capacity	Ltr	4.0	4.7
Water Per Cycle	Ltr	2.2	2.75
Water Pressure Input	Bar	1.5 - 3.0	1.5 - 3.0
Max Inlet Temp	C	50c	50c
Tank Heating Element	kW	1.4	1.4
Boiler Heating Element	kW	3.0	3.0
Pump Power	kW	0.23	0.23
Total Power	kW	3.23	3.23
Voltage Input	V	230v 1N/50	230v 1N/50
Double Wall Construction		Door Only	Door Only
Drain Pump		Optional	Optional
WRAS Approval		Type B Air Gap	Type B Air Gap
Full Width Filters		-	-
Front Drain Access		-	-







MS9451	MS9453	MS9553PS
59.5 x 62 x 81	59.5 x 62 x 81	60 x 62 x 82
50 x 50	50 x 50	50 x 50
35	35	38
120 or 180	120 or 180	120 or 180
26	26	16
8	8	8
3.8	3.8	3.5
1.5 - 3.0	1.5 - 3.0	1.5 - 3.0
50c	50c	50c
2.5	2.5	2.5
3.0	6.0	6.0
0.55	0.55	0.55
3.55	6.55	6.55
230v 1N/50	230v 1N/50	230v 1N/50
Door Only	Door Only	Door & Body
Optional	Optional	Included
Type B Air Gap (Type A Optional)	Type B Air Gap (Type A Optional)	Type B Air Gap
-	-	Yes
-	-	Yes

Specifications





1 YEAR
COMMERCIAL WARRANTY
Optional labour warranties available. See page 29.

		MS/9103	MS/9103 (1 Phase)
External Dimensions	cm	63.5 x 73.5 x 146	63.5 x 73.5 x 146
Hood Opening Height	cm	1860mm	1860mm
Basket Dimensions	cm	50 x 50	50 x 50
Clear Entry Height	cm	44	44
Washing Cycle Time	sec.	75 or 180	75 or 180
Tank Capacity	Ltr	25	25
Boiler Capacity	Ltr	8	8
Water Per Cycle	Ltr	3.5	3.5
Water Pressure Input	Bar	2 - 3	2 -3
Max Inlet Temp	C	50c	50c
Tank Heating Element	kW	3.0	3.0
Boiler Heating Element	kW	11.5	6.0
Pump Power	kW	0.9	0.9
Total Power	kW	12.4	6.9
Voltage Input	V	400V 3N/50	230V 1N/50
Drain Pump		Optional	Optional
Front Pump Access		-	-
WRAS Approval		Type B Air Gap (Type A Optional)	Type B Air Gap (Type A Optional)
Full Width Filters		-	-
Partial Water Change		No	No





MS/9120AT	HT635.23AT
63.5 x 73.5 x 146	72.5 x 81.5 x 155
1860mm	1860mm
50 x 50	63 x 63
44	60X40
90, 120, 150, 210 or 270	90, 120, 150, 180 or 210
25	32
13	15
3.5	3.8
2 - 3	2 - 3
50c	50c
3.0	4.5
11.5	9
0.9	1.5 Kw
12.4	10.5
400V 3N/50	400V 3N/50
Included	Included
Yes	-
Type B Air Gap	Type B Air Gap
Yes	Yes
Yes	Yes

Specifications

1 YEAR
COMMERCIAL WARRANTY
Optional labour warranties available. See page 29.





		UT850.23AP	UT854.23A
External Dimensions	cm	60 x 69 x 86	60 x 69.5 x 143
Basket Dimensions	cm	50 x 50	50 x 50
Clear Entry Height	cm	40	60
Washing Cycle Time	sec.	60, 90, 120, 180 or 360 seconds	60, 90, 120, 180 or 360 seconds
Tank Capacity	Ltr	16	16
Boiler Capacity	Ltr	10	15
Water Per Cycle	Ltr	3.8	3.8
Water Pressure Input	Bar	1.5 - 3	1.5 - 3
Max Inlet Temp	C	50	50
Tank Heating Element	kW	2.5	2.5
Boiler Heating Element	kW	4.5	6
Pump Power	kW	0.74	0.74
Total Power	kW	5.24	6.74
Rinse Pump	kW	0.3	0.3
Voltage Input	V	400V 3N/50 or 230V 1N/50	400V 3N/50 or 230V 1N/50
Waste Outlet		Drain Pump (30mm)	Gravity (43mm)
Water Inlet		3/4" BSP	3/4" BSP









UT855.13A	UT869.13A	UT882.13A	UT9130.13A
68 x 81 x 190	82 x 81 x 190	95 x 81 x 190	144 x 81 x 190
55 x 69	69 x 69	82 x 69	130 x 69
80	80	80	80
180, 300, 420, 540 or 660 *Fixed 180 or 360 on MLP60E*	180, 300, 420, 540 or 660	180, 300, 420, 540 or 660	180, 300, 420, 540 or 660
42	42	42	88
28	28	28	28
11	14	14	25
1.5 - 3	1.5 - 3	1.5 - 3	1.5 - 3
50	50	50	50
6.0	9.0	9.0	9.0
6.0	9.0	9.0	2 x 6.0
2.0	2.4	2.4	2 x 2.4
8.0	11.4	11.4	16.8
0.3	0.37	0.37	0.37
400V 3N/50	400V 3N/50	400V 3N/50	400V 3N/50
Gravity (43mm)	Gravity (43mm)	Gravity (43mm)	Gravity (43mm)
3/4” BSP	3/4” BSP	3/4” BSP	3/4” BSP

Accessories

Manual Water Softeners



PRWS08	8 Litre	£80
PRWS12	12 Litre	£90

Automatic Water Softener



MJR02	Cold Water Feed	£325
B65	Hot Water Feed	£785

Installation Kits



PCE-025-6	3 Phase Commando	£15
PCE-023-6	1 Phase Commando	£15
12024651	3 Phase 2 Meter Cable	£13
12222524	1 Phase 2 Meter Cable	£13
BLUEHOSE	Water Inlet 1.5M 3/4"	£5

Detergents & Rinse Aids



EP051	Glasswash Detergent	£8
EP058	Dishwasher Detergent	£10
EP055	Rinse Aid	£8
EP060	Bistro Wash	£9

Adjustable Stand



902100	520 x 640 x 640mm	£80

Drip Trays



902200	350mm Drip Tray	£26
902201	400mm Drip Tray	£26
902203	500mm Drip Tray	£26

Plastic Baskets



PR	Pegged Plate Rack 500mm	£28
BR	Flat Bowl Rack 500mm	£28
FR	Flat Cutlery Rack 500mm	£28

Wire Baskets



902000	350 x 350mm	£38
902004	400 x 400mm	£45
902007	500 x 500mm	£48

Cutlery Insert



CB8	8 Compartment	£22
Q902314	Grey Insert	£3



NEW! 500mm 4-In-Row Glass Rack

By providing 4 rows of stacked glasses with a slight vertical lean, it manages to significantly improve wash results whilst reducing the chance of breakage for fragile items during the wash cycle.

GV50-20	500x500mm "4 In Row" Glass Rack	£79

Warranty & Service

Category	1 Year Commercial	+ 1 Year Labour	+ 2 Year Labour
Undercounter	Included	POA	POA
Passthrough	Included	POA	POA
Utensil Washers	Included	Included	N/A
Rack Conveyors	Included	Included	N/A

Extended warranties must be purchased at the time of ordering. Warranty callouts must be placed by the purchaser, who may not necessarily be the end user. All prices are estimated based on prevailing rates at time of printing. Some works may be subject to a site survey. A refundable deposit will be paid for all warranty claims and service callouts, this will be returned once the warranty claim is accepted. Terms and conditions apply. See www.mach.uk.com for more information.

DESIGN & INSTALLATION

- **Specialist consultants with expert knowledge of catering and hospitality industry requirements.**
- **Full CAD design service with all aspects covered including services & technical elevation drawings.**
- **All plumbing and electrical works undertaken by qualified engineers.**
- **Project management including third-party contractor liaison.**
- **Stainless steel fabrication including passthrough tabling, pre-wash sinks and storage solutions.**
- **Wide range of fixtures and fittings including spray arms, taps & waste management systems.**
- **Specialists in conveyor washer design including roller tabling.**
- **Food safe wall cladding and specialist flooring for washrooms.**

No Project Too Small. Contact Us For A Free Quotation.



MACH UK
Unit F, Woodside Ind. Estate
Bishop's Stortford
Hertfordshire
CM23 5RG

01279 876 500

MACH.UK.COM

SALES@MACH.UK.COM